CONTENTS

SWING DOOR HARDWARE
PREMIERE 3000
FEATURES AND BENEFITS
WOOD DISPLAY
ACTIVE - 3 POINT 2 SHOOTS
ACTIVE - 3 POINT 2 TONGUE (NO SHOOTS)
ACTIVE - 5 POINT 2 TONGUE 2 SHOOTS
PASSIVE
ACTIVE - 3 POINT 2 RHINO (NO SHOOTS)
ACTIVE - 4 POINT 2 RHINO (UPPER SHOOT ONLY)
ACTIVE - 5 POINT 2 RHINO & 2 SHOOTS
GEARBOX STRIKES / SHOOT BOLT STRIKES / TONGUE OR RHINO HOOK STRIKES
ADJUSTABLE STRIKES / OTHER ACCESSORIES / MOUNTING SCREWS
RHINO HOOK / EXTENSIONS
PREMIER 3000 FABRICATION DRAWING

PREMIERE 3000

FEATURES & BENEFITS

- HIGH SECURITY STAINLESS STEEL MULTI-POINT LOCKING SYSTEM.
- AVAILABLE IN 1.38” (35MM), 1.77” (45MM), 1.97" (50MM) AND 2.36" (60MM) BACKSETS.
- SUITABLE FOR DOORS WITH 0.63" (16MM) AND 0.79” (20MM) EURO GROVE ROUTING.
- NON-HANDED PULL AND TWIST LATCH BOLT REVERSES EASILY WITH LOCK INSTALLED.
- NON-HANDED ANTI-SLAM FEATURE
- ACCEPTS HANDLE SETS WITH 3.62” (92MM) HOLE SPACING. 2 PIECE GERARBOX DESIGN ALLOWS FOR LARGER SPACING. (CENTER OF SPINDLE TO CENTER OF KEY CYLINDER).
- SCREW SUPPORTS PREVENT FACE BAR FROM FLEXING DURING INSTALLATION, ENCOURAGING SMOOTH OPERATION.
- HANDLE HEIGHT CAN BE CUSTOMIZED TO YOUR NEEDS.
- OVERALL LOCK LENGTH CAN BE CUSTOMIZED TO FIT YOUR DOOR PRECISELY.
- DUAL CUT-DOWN LOCK SYSTEMS ARE AVAILABLE.
- LOWER AND UPPER ASSEMBLIES CAN BE SHIPPED TO YOU AS A SINGLE UNIT OR AS TWO SEPARATE ITEMS.

LEGEND	
HH	HANDLE HEIGHT
BS	BACK SET
PL	PANEL LENGTH
HS	HANDLE SPACING
FB	FACE BAR
BT	BOTTOM TONGUE
TT	TOP TONGUE

MATERIALS	
DEAD BOLT	STAINLESS STEEL
DRIVE BAR	
FACE BAR	
GEARBOX	
SHOOT BOLT	
TONGUE	
RHINO HOOK	

DIMENSIONS ARE FOR REFERENCE ONLY AND ARE IN INCHES UNLESS OTHERWISE NOTED.
CONTACT OUR ENGINEERING DEPARTMENT WITH SPECIFIC APPLICATION QUESTIONS OR REQUIREMENTS.
NOT ALL COMBINATIONS LISTED ARE CURRENTLY STOCKED, EXTRA LEAD TIME MAY BE REQUIRED.

P3000

WOOD DISPLAY
3634

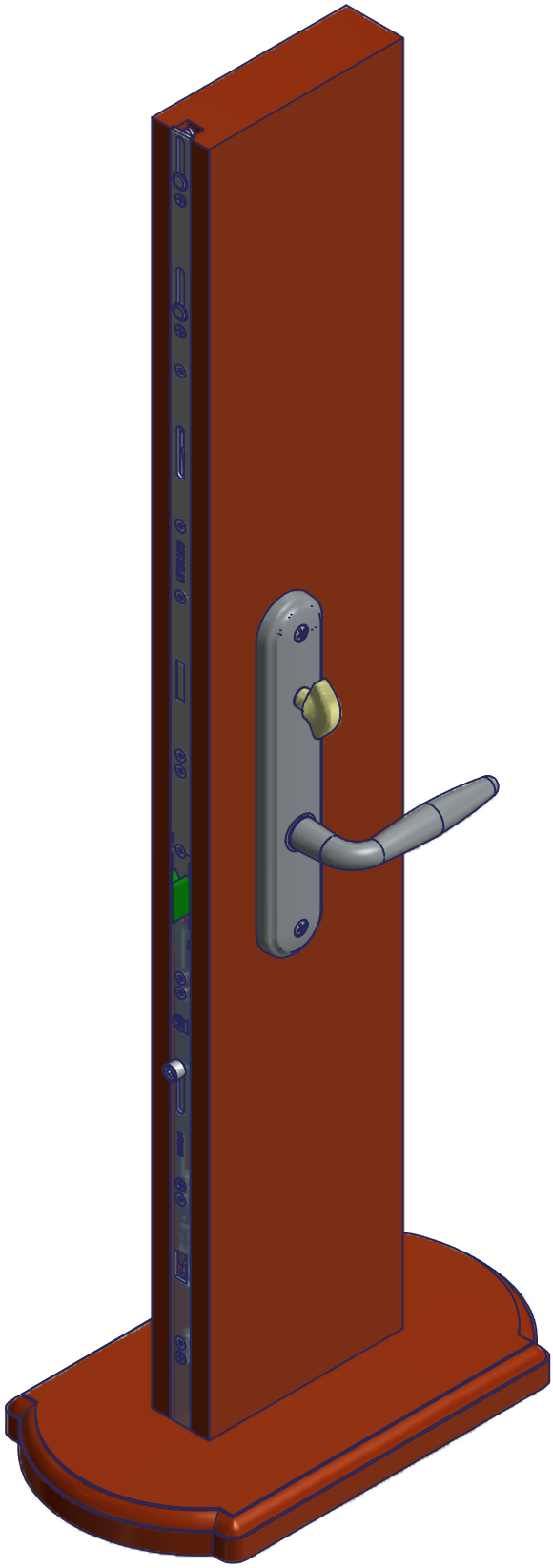

DIMENSIONS ARE FOR REFERENCE ONLY AND ARE IN INCHES UNLESS OTHERWISE NOTED.
CONTACT OUR ENGINEERING DEPARTMENT WITH SPECIFIC APPLICATION QUESTIONS OR REQUIREMENTS.
NOT ALL COMBINATIONS LISTED ARE CURRENTLY STOCKED, EXTRA LEAD TIME MAY BE REQUIRED.

PREMIERE 3000

ACTIVE - 3 POINT 2 SHOOT

BOX QTY: 10

LEGEND	
HH	HANDLE HEIGHT
BS	BACK SET
PL	PANEL LENGTH
FB	FACE BAR
HS	HANDLE SPACING

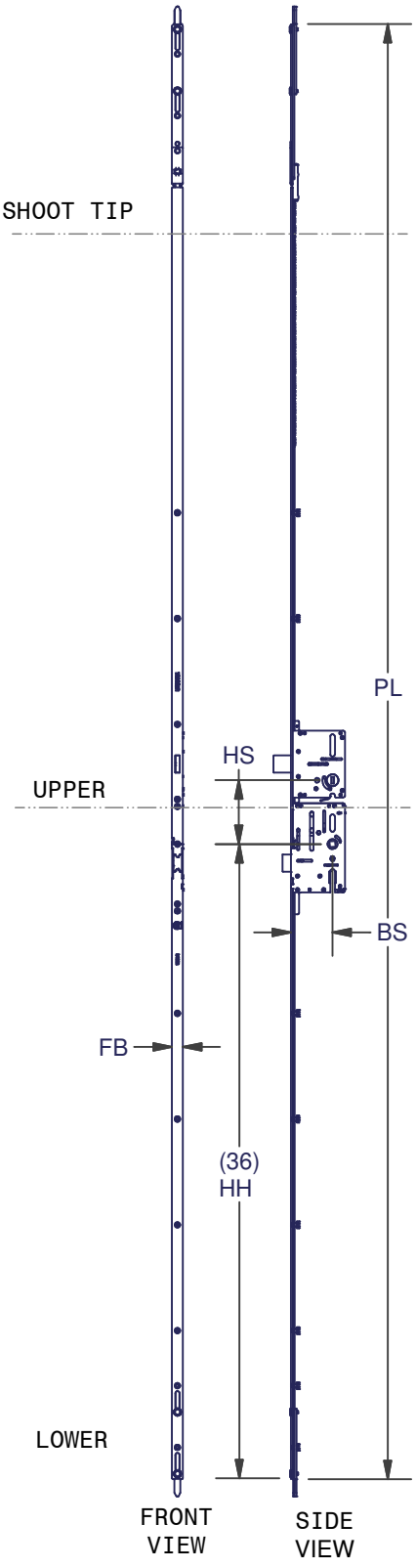

LOCKING FEATURES:
(1) 1" DEAD BOLT
(2) SHOOT BOLTS

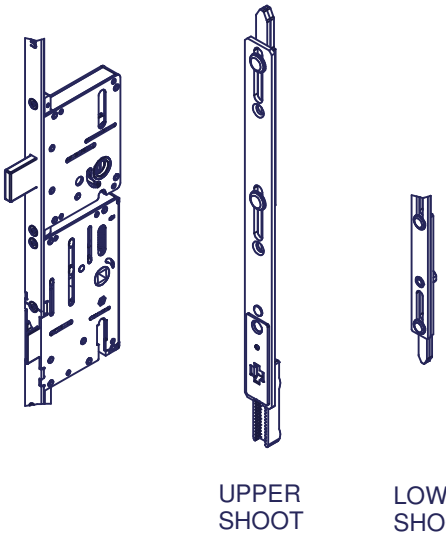

NOTE ONE (1) LOWER, ONE (1) UPPER, AND ONE (1) SHOOT TIP REQUIRED FOR THIS APPLICATION

GEARBOX	HS	HH	BS	FB	PANEL LENGTH		ITEM NUMBER			
					MIN	MAX	COMPLETE ASSEMBLY	LOWER ASSEMBLY	UPPER ASSEMBLY	SHOOT TIP
AMERICAN (SINGLE CUT-DOWN)	92MM 3.622"	36"	45mm 1" THROW	16mm 0.63"	69.0	82.5	604530001	16-30001LA	604530001UA	3468
					82.0	95.5	604530002	16-30001LA	604530002UA	3468
					95.0	108.5	604530003	16-30001LA	604530003UA	3468
					108.0	121.5	604530004	16-30001LA	604530004UA	3468
				20mm 0.787"	69.0	82.5	604532001	20-32001LA	604532001UA	3467
					82.0	95.5	604532002	20-32001LA	604532002UA	3467
					95.0	108.5	604532003	20-32001LA	604532003UA	3467
					108.0	121.5	604532004	20-32001LA	604532004UA	3467
			60mm 1" THROW	16mm 0.63"	69.0	82.5	606030001	16-30001LA	606030001UA	3468
					82.0	95.5	606030002	16-30001LA	606030002UA	3468
					95.0	108.5	606030003	16-30001LA	606030003UA	3468
					108.0	121.5	606030004	16-30001LA	606030004UA	3468
				20mm 0.787"	69.0	82.5	606032001	20-32001LA	606032001UA	3467
					82.0	95.5	606032002	20-32001LA	606032002UA	3467
					95.0	108.5	606032003	20-32001LA	606032003UA	3467
					108.0	121.5	606032004	20-32001LA	606032004UA	3467
AMERICAN (SINGLE CUT-DOWN)	92MM 3.622"	36"	35mm .787" THROW	16mm 0.63"	69.0	82.5	603540001	16-40001LA	603540001UA	3468
					82.0	95.5	603540002	16-40001LA	603540002UA	3468
					95.0	108.5	603540003	16-40001LA	603540003UA	3468
					108.0	121.5	603540004	16-40001LA	603540004UA	3468
				20mm 0.787"	69.0	82.5	603542001	20-42001LA	603542001UA	3467
					82.0	95.5	603542002	20-42001LA	603542002UA	3467
					95.0	108.5	603542003	20-42001LA	603542003UA	3467
					108.0	121.5	603542004	20-42001LA	603542004UA	3467

DIMENSIONS ARE FOR REFERENCE ONLY AND ARE IN INCHES UNLESS OTHERWISE NOTED.
CONTACT OUR ENGINEERING DEPARTMENT WITH SPECIFIC APPLICATION QUESTIONS OR REQUIREMENTS.
NOT ALL COMBINATIONS LISTED ARE CURRENTLY STOCKED, EXTRA LEAD TIME MAY BE REQUIRED.

PREMIERE 3000

ACTIVE - 3 POINT 2 RHINO NO SHOOTS

BOX QTY = 10

LEGEND	
HH	HANDLE HEIGHT
BS	BACK SET
PL	PANEL LENGTH
FB	FACE BAR
BT	BOTTOM TONGUE
TT	TOP TONGUE
HS	HANDLE SPACING

LOCKING FEATURES:
(1) 1" DEAD BOLT
(2) RHINO HOOKS

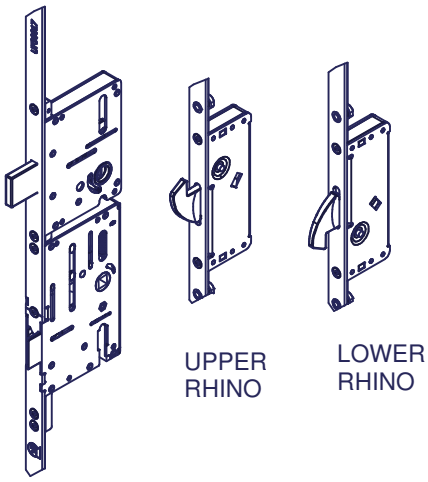

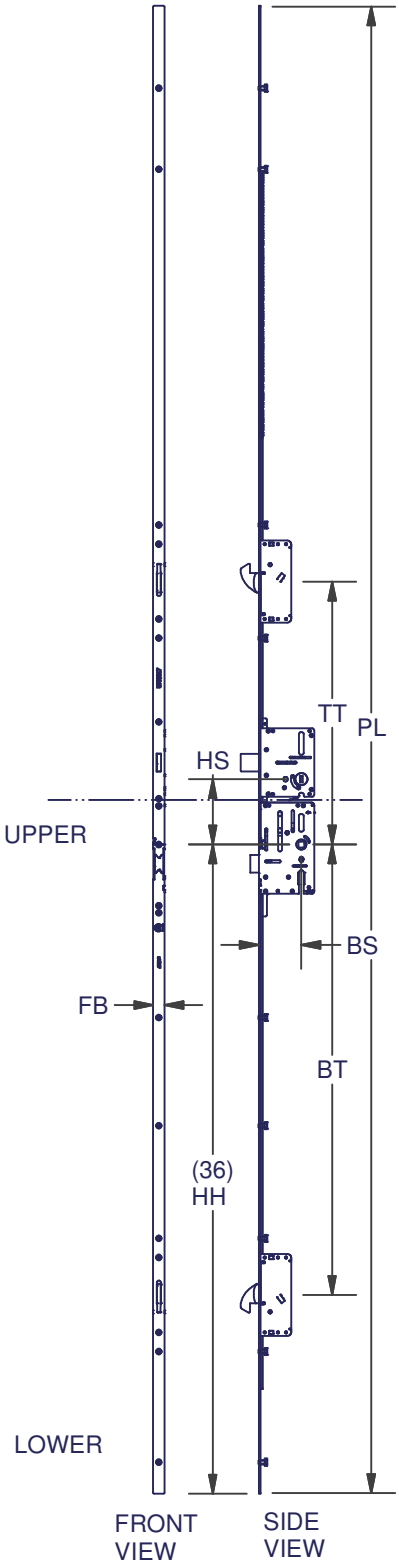

NOTE ONE (1) LOWER AND ONE (1) UPPER REQUIRED FOR THIS APPLICATION

GEARBOX	HS	HH	BS	FB	PANEL LENGTH MIN	PANEL LENGTH MAX	ITEM NUMBER COMPLETE ASSEMBLY	ITEM NUMBER LOWER ASSEMBLY	ITEM NUMBER UPPER ASSEMBLY	HOOK LOCATION BT	HOOK LOCATION TT
AMERICAN (SINGLE CUT-DOWN)	92MM 3.622"	36"	45mm 1" THROW	16mm 0.63"	69.0	82.5	664530017	16-30017LA	664530017UA	24.87	14.47
					82.0	95.5	664530018	16-30017LA	664530018UA	24.87	27.47
					95.0	108.5	664530019	16-30017LA	664530019UA	24.87	40.47
					108.0	121.5	664530020	16-30017LA	664530020UA	24.87	53.47
				20mm 0.787"	69.0	82.5	664532017	20-32017LA	664532017UA	24.87	14.47
					82.0	95.5	664532018	20-32017LA	664532018UA	24.87	27.47
					95.0	108.5	664532019	20-32017LA	664532019UA	24.87	40.47
					108.0	121.2	664532020	20-32017LA	664532020UA	24.87	53.47
			60mm 1" THROW	16mm 0.63"	69.0	82.5	666030017	16-30017LA	666030017UA	24.87	14.47
					82.0	95.5	666030018	16-30017LA	666030018UA	24.87	27.47
					95.0	108.5	666032019	16-30017LA	666030019UA	24.87	40.47
					108.0	121.5	666032020	16-30017LA	666030020UA	24.87	53.47
				20mm 0.787"	69.0	82.5	666032017	20-32017LA	666032017UA	24.87	14.47
					82.0	95.5	666032018	20-32017LA	666032018UA	24.87	27.47
					95.0	108.5	666032019	20-32017LA	666032019UA	24.87	40.47
					108.0	121.5	666032020	20-32017LA	666032020UA	24.87	53.47

AMERICAN (SINGLE CUT-DOWN)	92MM 3.622"	36"	35mm .787" THROW	16mm 0.63"	69.0	82.5	663540017	16-40017LA	663540017UA	24.87	14.47
					82.0	95.5	663540018	16-40017LA	663540018UA	24.87	27.47
					95.0	108.5	663540019	16-40017LA	663540019UA	24.87	40.47
					108.0	121.5	663540020	16-40017LA	663540020UA	24.87	53.47
				20mm 0.787"	69.0	82.5	663542017	20-42017LA	663542017UA	24.87	14.47
					82.0	95.5	663542018	20-42017LA	663542018UA	24.87	27.47
					95.0	108.5	663542019	20-42017LA	663542019UA	24.87	40.47
					108.0	121.5	663542020	20-42017LA	663542020UA	24.87	53.47

DIMENSIONS ARE FOR REFERENCE ONLY AND ARE IN INCHES UNLESS OTHERWISE NOTED.
CONTACT OUR ENGINEERING DEPARTMENT WITH SPECIFIC APPLICATION QUESTIONS OR REQUIREMENTS.
NOT ALL COMBINATIONS LISTED ARE CURRENTLY STOCKED, EXTRA LEAD TIME MAY BE REQUIRED.

PREMIERE 3000

ACTIVE - 5 POINT 2 TONGUE & 2 SHOOTS

BOX QTY: 10

LEGEND	
HH	HANDLE HEIGHT
BS	BACK SET
PL	PANEL LENGTH
FB	FACE BAR
BT	BOTTOM TONGUE
TT	TOP TONGUE
HS	HANDLE SPACING

LOCKING FEATURES:
(1) 1" DEAD BOLT
(2) TONGUES
(2) SHOOT BOLTS

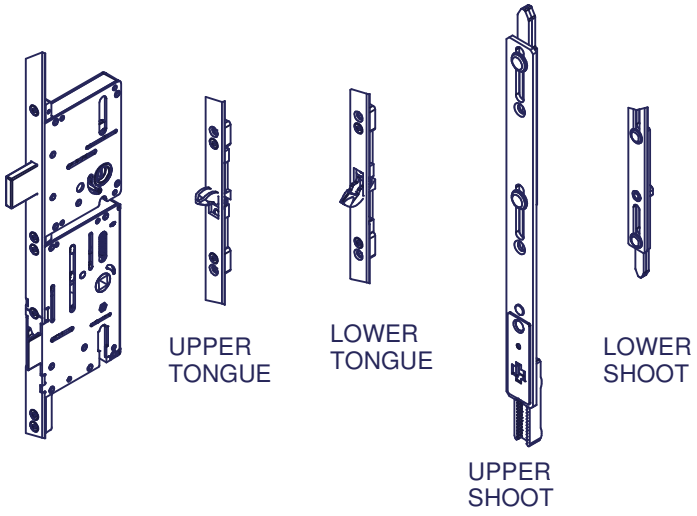

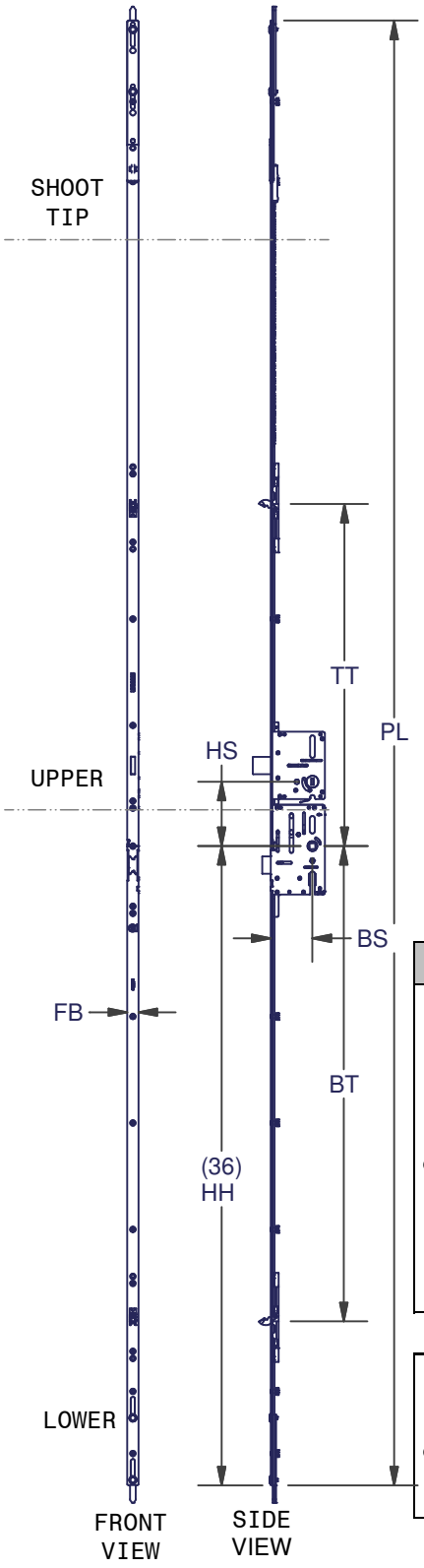

NOTE ONE (1) LOWER AND ONE (1) UPPER REQUIRED FOR THIS APPLICATION
NOTE THIS LOCKING SYSTEM REQUIRES AN ASTRAGAL

GEARBOX	HS	HH	BS	FB	PANEL LENGTH		ITEM NUMBER				TONGUE LOCATION	
					MIN	MAX	COMPLETE ASSEMBLY	LOWER ASSEMBLY	UPPER ASSEMBLY	SHOOT TIP	BT	TT
AMERICAN (SINGLE CUT-DOWN)	92MM 3.622"	36"	45mm 1" THROW	16mm 0.63"	69.0	82.5	644530009	16-30009LA	644530009UA	3468	26.42	18.92
					82.0	95.5	644530010	16-30009LA	644530010UA	3468	26.42	26.39
					95.0	108.5	644530011	16-30009LA	644530011UA	3468	26.42	32.89
					108.0	121.5	644530012	16-30009LA	644530012UA	3468	26.42	39.39
				20mm 0.787"	69.0	82.5	644532009	20-32009LA	644532009UA	3467	26.42	18.92
					82.0	95.5	644532010	20-32009LA	644532010UA	3467	26.42	26.39
					95.0	108.5	644532011	20-32009LA	644532011UA	3467	26.42	32.89
					108.0	121.5	644532012	20-32009LA	644532012UA	3467	26.42	39.39
			60mm 1" THROW	16mm 0.63"	69.0	82.5	646030009	16-30009LA	646030009UA	3468	26.42	18.92
					82.0	95.5	646030010	16-30009LA	646030010UA	3468	26.42	26.39
					95.0	108.5	646030011	16-30009LA	646030011UA	3468	26.42	32.89
					108.0	121.5	646030012	16-30009LA	646030012UA	3468	26.42	39.39
				20mm 0.787"	69.0	82.5	646032009	20-32009LA	646032009UA	3467	26.42	18.92
					82.0	95.5	646032010	20-32009LA	646032010UA	3467	26.42	26.39
					95.0	108.5	646032011	20-32009LA	646032011UA	3467	26.42	32.89
					108.0	121.5	646032012	20-32009LA	646032012UA	3467	26.42	39.39
AMERICAN (SINGLE CUT-DOWN)	92MM 3.622"	36"	35mm .787" THROW	16mm 0.63"	69.0	82.5	643540009	16-40009LA	643540009UA	3468	26.42	18.92
					82.0	95.5	643540010	16-40009LA	643540010UA	3468	26.42	26.39
					95.0	108.5	643540011	16-40009LA	643540011UA	3468	26.42	32.89
					108.0	121.5	643540012	16-40009LA	643540012UA	3468	26.42	39.39
				20mm 0.787"	69.0	82.5	643542009	20-42009LA	643542009UA	3467	26.42	18.92
					82.0	95.5	643542010	20-42009LA	643542010UA	3467	26.42	26.39
					95.0	108.5	643542011	20-42009LA	643542011UA	3467	26.42	32.89
					108.0	121.5	643542012	20-42009LA	643542012UA	3467	26.42	39.39

DIMENSIONS ARE FOR REFERENCE ONLY AND ARE IN INCHES UNLESS OTHERWISE NOTED.
CONTACT OUR ENGINEERING DEPARTMENT WITH SPECIFIC APPLICATION QUESTIONS OR REQUIREMENTS.
NOT ALL COMBINATIONS LISTED ARE CURRENTLY STOCKED, EXTRA LEAD TIME MAY BE REQUIRED.

PREMIERE 3000

PASSIVE - LOCKING SYSTEM

BOX QTY: 10

LEGEND	
HH	HANDLE HEIGHT
BS	BACK SET
PL	PANEL LENGTH
HS	HANDLE SPACING
FB	FACE BAR

LOCKING FEATURES:
(1) 1" DEAD BOLT
(2) SHOOT BOLTS

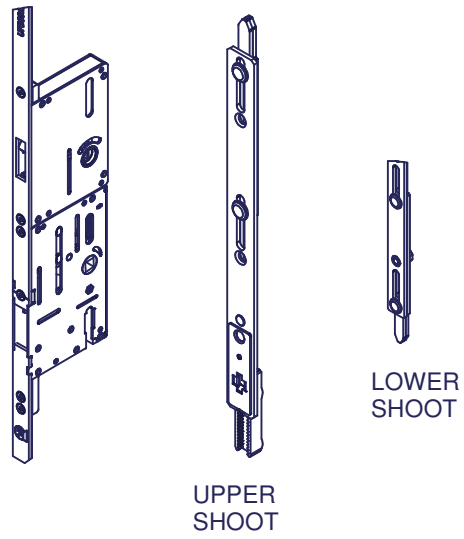

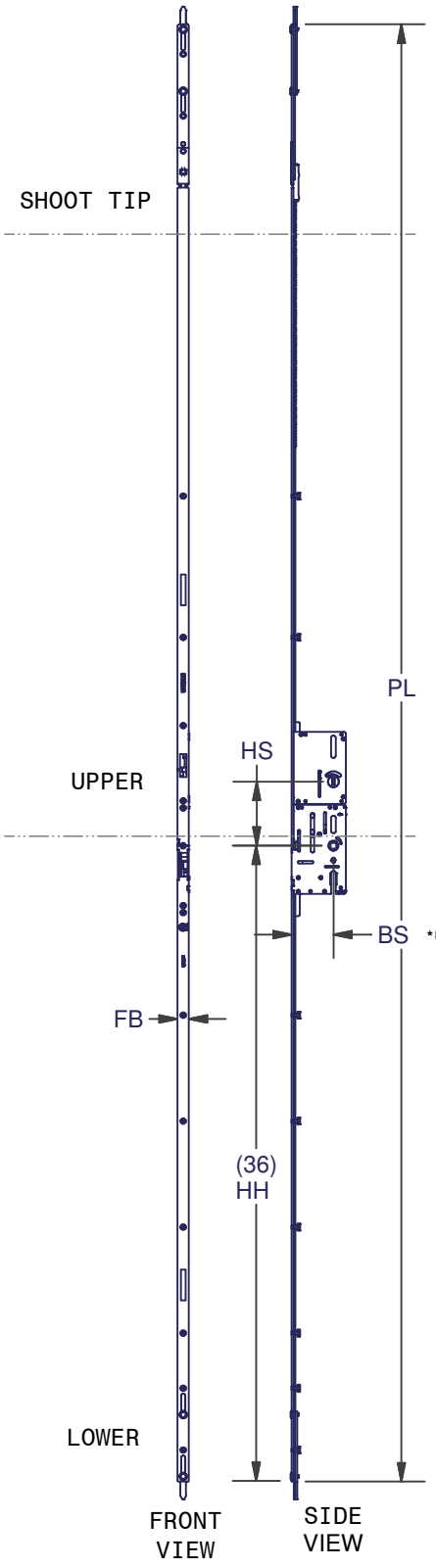

NOTE ONE (1) LOWER, ONE (1) UPPER, AND ONE (1) SHOOT TIP REQUIRED FOR THIS APPLICATION

GEARBOX	HS	HH	BS	FB	PANEL LENGTH MIN	PANEL LENGTH MAX	ITEM NUMBER COMPLETE ASSEMBLY	LOWER ASSEMBLY	UPPER ASSEMBLY	SHOOT TIP
AMERICAN (SINGLE CUT-DOWN)	92MM 3.622"	36"	45mm 1" THROW	16mm 0.63"	69.0	82.5	654530013	16-30013LA	654530013UA	3468
					82.0	95.5	654530014	16-30013LA	654530014UA	3468
					95.0	108.5	654530015	16-30013LA	654530015UA	3468
					108.0	121.5	654530016	16-30013LA	654530016UA	3468
				20mm 0.787"	69.0	82.5	654532013	20-32013LA	654532013UA	3467
					82.0	95.5	654532014	20-32013LA	654532014UA	3467
					95.0	108.5	654532015	20-32013LA	654532015UA	3467
					108.0	121.5	654532016	20-32013LA	654532016UA	3467
			60mm 1" THROW	16mm 0.63"	69.0	82.5	656030013	16-30013LA	656030013UA	3468
					82.0	95.5	656030014	16-30013LA	656030014UA	3468
					95.0	108.5	656030015	16-30013LA	656030015UA	3468
					108.0	121.5	656030016	16-30013LA	656030016UA	3468
				20mm 0.787"	69.0	82.5	656032013	20-32013LA	656032013UA	3467
					82.0	95.5	656032014	20-32013LA	656032014UA	3467
					95.0	108.5	656032015	20-32013LA	656032015UA	3467
					108.0	121.5	656032016	20-32013LA	656032016UA	3467
AMERICAN (SINGLE CUT-DOWN)	92MM 3.622"	36"	35mm .787" THROW	16mm 0.63"	69.0	82.5	653540013	16-40013LA	653540013UA	3468
					82.0	95.5	653540014	16-40013LA	653540014UA	3468
					95.0	108.5	653540015	16-40013LA	653540015UA	3468
					108.0	121.5	653540016	16-40013LA	653540016UA	3468
				20mm 0.787"	69.0	82.5	653542013	20-42013LA	653542013UA	3467
					82.0	95.5	653542014	20-42013LA	653542014UA	3467
					95.0	108.5	653542015	20-42013LA	653542015UA	3467
					108.0	121.5	653542016	20-42013LA	653542016UA	3467

DIMENSIONS ARE FOR REFERENCE ONLY AND ARE IN INCHES UNLESS OTHERWISE NOTED.
CONTACT OUR ENGINEERING DEPARTMENT WITH SPECIFIC APPLICATION QUESTIONS OR REQUIREMENTS.
NOT ALL COMBINATIONS LISTED ARE CURRENTLY STOCKED, EXTRA LEAD TIME MAY BE REQUIRED.

PREMIERE 3000

ACTIVE - 3 POINT 2 RHINO NO SHOOTS

BOX QTY = 10

LEGEND	
HH	HANDLE HEIGHT
BS	BACK SET
PL	PANEL LENGTH
FB	FACE BAR
BT	BOTTOM TONGUE
TT	TOP TONGUE
HS	HANDLE SPACING

LOCKING FEATURES:
(1) 1" DEAD BOLT
(2) RHINO HOOKS

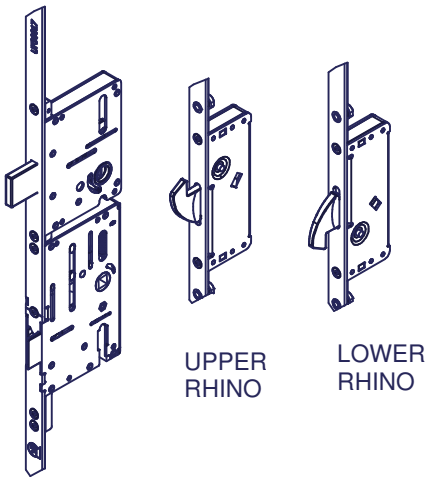

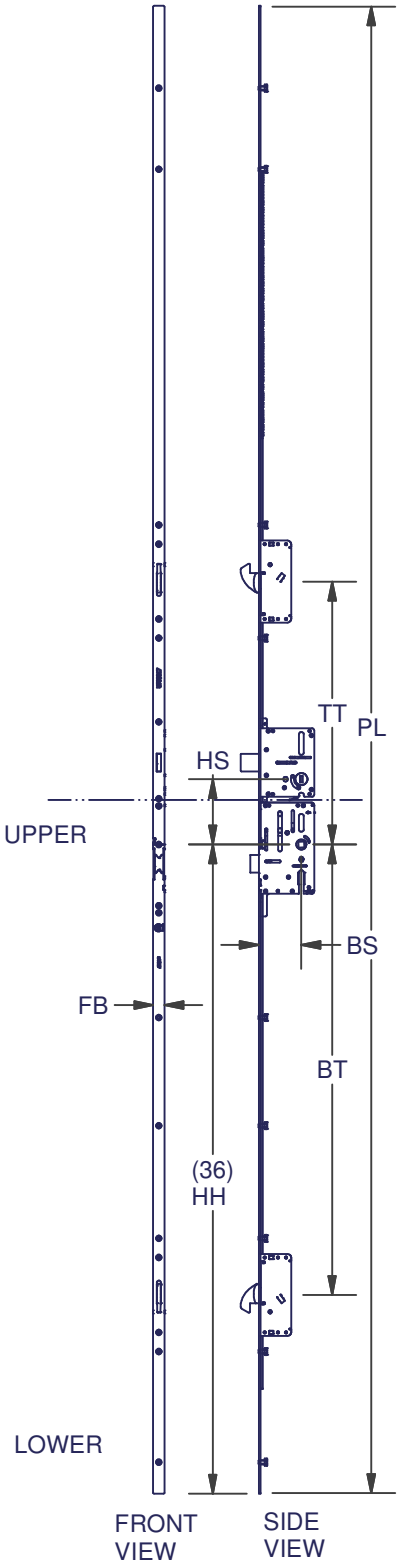

NOTE ONE (1) LOWER AND ONE (1) UPPER REQUIRED FOR THIS APPLICATION

GEARBOX	HS	HH	BS	FB	PANEL LENGTH MIN	PANEL LENGTH MAX	ITEM NUMBER COMPLETE ASSEMBLY	ITEM NUMBER LOWER ASSEMBLY	ITEM NUMBER UPPER ASSEMBLY	HOOK LOCATION BT	HOOK LOCATION TT
AMERICAN (SINGLE CUT-DOWN)	92MM 3.622"	36"	45mm 1" THROW	16mm 0.63"	69.0	82.5	664530017	16-30017LA	644530017UA	24.87	14.47
					82.0	95.5	664530018	16-30017LA	664530018UA	24.87	27.47
					95.0	108.5	664530019	16-30017LA	664530019UA	24.87	40.47
					108.0	121.5	664530020	16-30017LA	664530020UA	24.87	53.47
				20mm 0.787"	69.0	82.5	664532017	20-32017LA	664532017UA	24.87	14.47
					82.0	95.5	664532018	20-32017LA	664532018UA	24.87	27.47
					95.0	108.5	664532019	20-32017LA	664532019UA	24.87	40.47
					108.0	121.2	664532020	20-32017LA	664532020UA	24.87	53.47
			60mm 1" THROW	16mm 0.63"	69.0	82.5	666030017	16-30017LA	666030017UA	24.87	14.47
					82.0	95.5	666030018	16-30017LA	666030018UA	24.87	27.47
					95.0	108.5	666032019	16-30017LA	666030019UA	24.87	40.47
					108.0	121.5	666032020	16-30017LA	666030020UA	24.87	53.47
				20mm 0.787"	69.0	82.5	666032017	20-32017LA	666032017UA	24.87	14.47
					82.0	95.5	666032018	20-32017LA	666032018UA	24.87	27.47
					95.0	108.5	666032019	20-32017LA	666032019UA	24.87	40.47
					108.0	121.5	666032020	20-32017LA	666032020UA	24.87	53.47
AMERICAN (SINGLE CUT-DOWN)	92MM 3.622"	36"	35mm .787" THROW	16mm 0.63"	69.0	82.5	663540017	16-40017LA	663540017UA	24.87	14.47
					82.0	95.5	663540018	16-40017LA	663540018UA	24.87	27.47
					95.0	108.5	663540019	16-40017LA	663540019UA	24.87	40.47
					108.0	121.5	663540020	16-40017LA	663540020UA	24.87	53.47
				20mm 0.787"	69.0	82.5	663542017	20-42017LA	663542017UA	24.87	14.47
					82.0	95.5	663542018	20-42017LA	663542018UA	24.87	27.47
					95.0	108.5	663542019	20-42017LA	663542019UA	24.87	40.47
					108.0	121.5	663542020	20-42017LA	663542020UA	24.87	53.47

PART NUMBERS ARE NOT IN SYSTEM AT THIS TIME.

DIMENSIONS ARE FOR REFERENCE ONLY AND ARE IN INCHES UNLESS OTHERWISE NOTED.
CONTACT OUR ENGINEERING DEPARTMENT WITH SPECIFIC APPLICATION QUESTIONS OR REQUIREMENTS.
NOT ALL COMBINATIONS LISTED ARE CURRENTLY STOCKED, EXTRA LEAD TIME MAY BE REQUIRED.

AMESBURY *Reliable Resource. Superior Solutions.*

PREMIERE 3000

ACTIVE - 4 POINT 2 RHINO HOOK LOCKING SYSTEM

BOX QTY = 10

LEGEND	
HH	HANDLE HEIGHT
BS	BACK SET
PL	PANEL LENGTH
FB	FACE BAR
BT	BOTTOM TONGUE
TT	TOP TONGUE
HS	HANDLE SPACING

LOCKING FEATURES:
(1) 1" DEAD BOLT
(2) RHINO HOOKS
(1) SHOOT BOLT

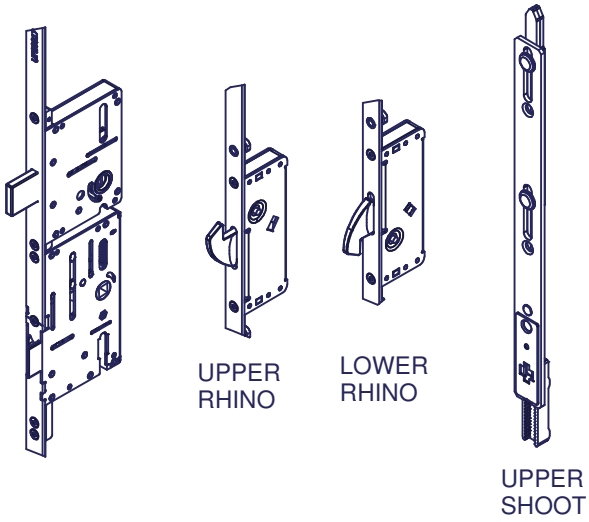

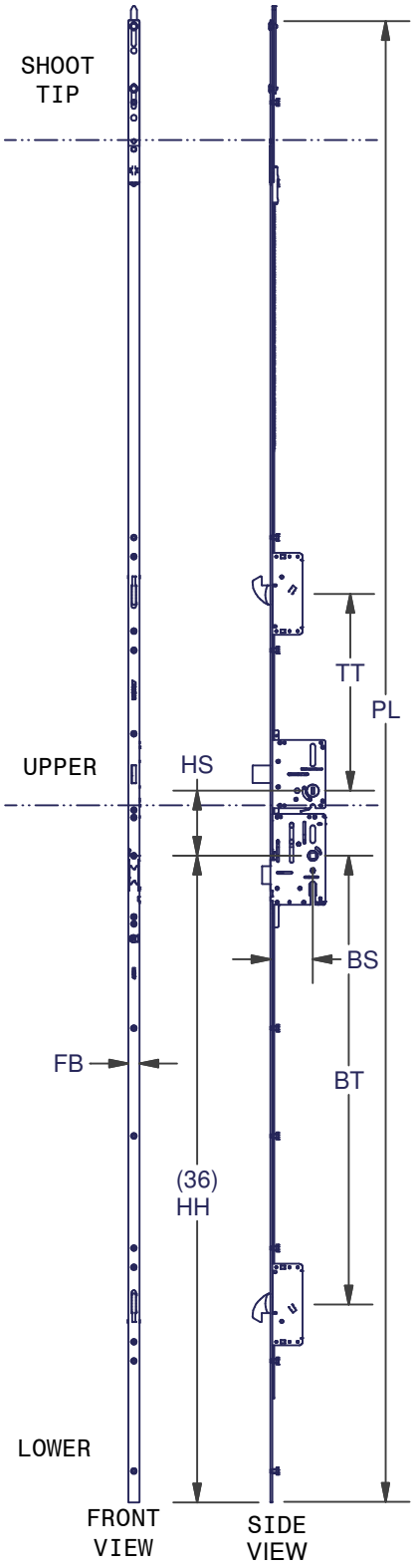

NOTE ONE (1) LOWER, ONE (1) UPPER, AND ONE (1) SHOOT TIP REQUIRED FOR THIS APPLICATION

GEARBOX	HS	HH	BS	FB	PANEL LENGTH		ITEM NUMBER				HOOK LOCATION	
					MIN	MAX	COMPLETE ASSEMBLY	LOWER ASSEMBLY	UPPER ASSEMBLY	SHOOT TIP	BT	TT
AMERICAN (SINGLE CUT-DOWN)	92MM 3.622"	36"	45mm 1" THROW	16mm 0.63"	69.0	82.5	664530017	16-30017LA	664530017UA	3468	24.87	14.47
					82.0	95.5	664530018	16-30017LA	664530018UA	3468	24.87	27.47
					95.0	108.5	664530019	16-30017LA	664530019UA	3468	24.87	40.47
					108.0	121.5	664530020	16-30017LA	664530020UA	3468	24.87	53.47
				20mm 0.787"	69.0	82.5	664532017	20-32017LA	664532017UA	3467	24.87	14.47
					82.0	95.5	664532018	20-32017LA	664532018UA	3467	24.87	27.47
					95.0	108.5	664532019	20-32017LA	664532019UA	3467	24.87	40.47
					108.0	121.2	664532020	20-32017LA	664532020UA	3467	24.87	53.47
			60mm 1" THROW	16mm 0.63"	69.0	82.5	666030017	16-30017LA	666030017UA	3468	24.87	14.47
					82.0	95.5	666030018	16-30017LA	666030018UA	3468	24.87	27.47
					95.0	108.5	666032019	16-30017LA	666030019UA	3468	24.87	40.47
					108.0	121.5	666032020	16-30017LA	666030020UA	3468	24.87	53.47
				20mm 0.787"	69.0	82.5	666032017	20-32017LA	666032017UA	3467	24.87	14.47
					82.0	95.5	666032018	20-32017LA	666032018UA	3467	24.87	27.47
					95.0	108.5	666032019	20-32017LA	666032019UA	3467	24.87	40.47
					108.0	121.5	666032020	20-32017LA	666032020UA	3467	24.87	53.47

AMERICAN (SINGLE CUT-DOWN)	92MM 3.622"	36"	35mm .787" THROW	16mm 0.63"	69.0	82.5	663540017	16-40017LA	663540017UA	3468	24.87	14.47
					82.0	95.5	663540018	16-40017LA	663540018UA	3468	24.87	27.47
					95.0	108.5	663540019	16-40017LA	663540019UA	3468	24.87	40.47
					108.0	121.5	653540020	16-40017LA	653540020UA	3468	24.87	53.47
				20mm 0.787"	69.0	82.5	653542017	20-42017LA	653542017UA	3467	24.87	14.47
					82.0	95.5	653542018	20-42017LA	653542018UA	3467	24.87	27.47
					95.0	108.5	653542019	20-42017LA	653542019UA	3467	24.87	40.47
					108.0	121.5	653542020	20-42017LA	653542020UA	3467	24.87	53.47

DIMENSIONS ARE FOR REFERENCE ONLY AND ARE IN INCHES UNLESS OTHERWISE NOTED.
CONTACT OUR ENGINEERING DEPARTMENT WITH SPECIFIC APPLICATION QUESTIONS OR REQUIREMENTS.
NOT ALL COMBINATIONS LISTED ARE CURRENTLY STOCKED, EXTRA LEAD TIME MAY BE REQUIRED.

AMESBURY *Reliable Resource. Superior Solutions.*

PREMIERE 3000

ACTIVE - 5 POINT 2 RHINO & 2 SHOOTS

BOX QTY: 10

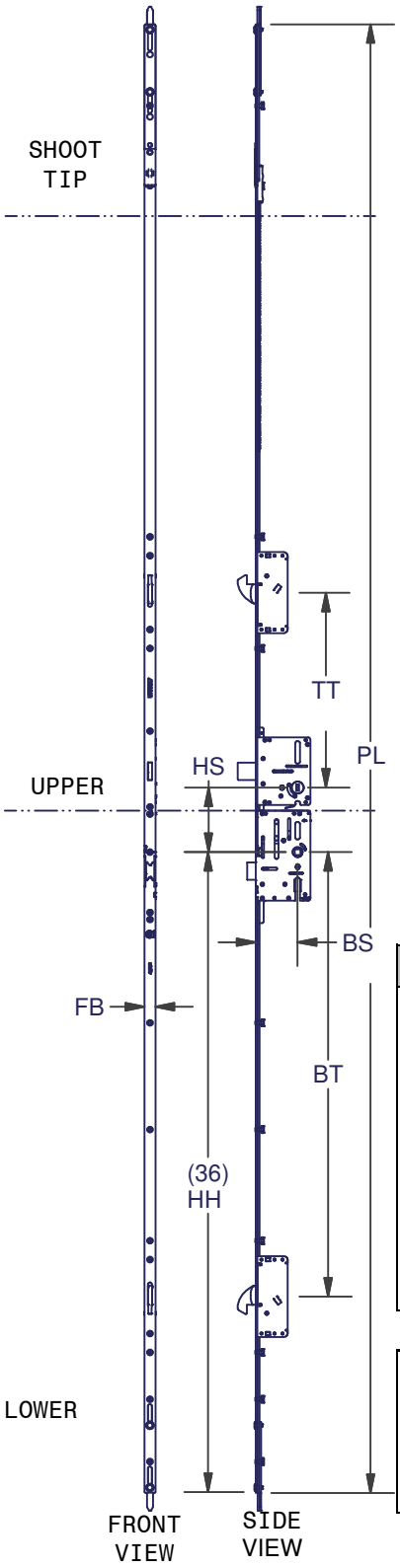

LEGEND	
HH	HANDLE HEIGHT
BS	BACK SET
PL	PANEL LENGTH
FB	FACE BAR
BT	BOTTOM TONGUE
TT	TOP TONGUE
HS	HANDLE SPACING

LOCKING FEATURES:
(1) 1" DEAD BOLT
(2) RHINO HOOKS
(2) SHOOT BOLTs

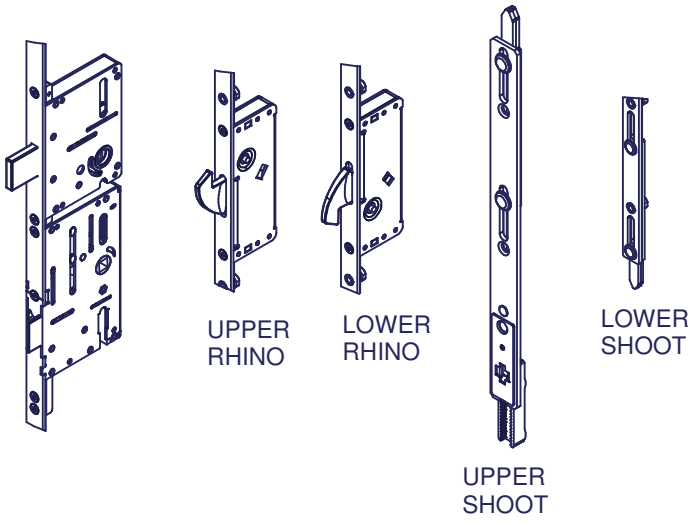

NOTE ONE (1) LOWER, ONE (1) UPPER, AND ONE (1) SHOOT TIP REQUIRED FOR THIS APPLICATION

GEARBOX	HS	HH	BS	FB	PANEL LENGTH MIN	PANEL LENGTH MAX	ITEM NUMBER COMPLETE ASSEMBLY	ITEM NUMBER LOWER ASSEMBLY	ITEM NUMBER UPPER ASSEMBLY	ITEM NUMBER SHOOT TIP	HOOK LOCATION BT	HOOK LOCATION TT
AMERICAN (SINGLE CUT-DOWN)	92MM 3.622"	36"	45mm 1" THROW	16mm 0.63"	69.0	82.5	674530021	16-30021LA	664530017UA	3468	24.87	14.47
					82.0	95.5	674530022	16-30021LA	664530018UA	3468	24.87	27.47
					95.0	108.5	674530023	16-30021LA	664530019UA	3468	24.87	40.47
					108.0	121.5	674530024	16-30021LA	664530020UA	3468	24.87	53.47
				20mm 0.787"	69.0	82.5	674532021	16-32021LA	664532017UA	3467	24.87	14.47
					82.0	95.5	674532022	16-32021LA	664532018UA	3467	24.87	27.47
					95.0	108.5	674532023	16-32021LA	664532019UA	3467	24.87	40.47
					108.0	121.2	674532024	16-32021LA	664532020UA	3467	24.87	53.47
			60mm 1" THROW	16mm 0.63"	69.0	82.5	676030021	16-30021LA	666030017UA	3468	24.87	14.47
					82.0	95.5	676030022	16-30021LA	666030018UA	3468	24.87	27.47
					95.0	108.5	676030023	16-30021LA	666030019UA	3468	24.87	40.47
					108.0	121.5	676030024	16-30021LA	666030020UA	3468	24.87	53.47
				20mm 0.787"	69.0	82.5	676032021	20-32021LA	666032017UA	3467	24.87	14.47
					82.0	95.5	676032022	20-32021LA	666032018UA	3467	24.87	27.47
					95.0	108.5	676032023	20-30021LA	666032019UA	3467	24.87	40.47
					108.0	121.5	676032024	20-32021LA	666032020UA	3467	24.87	53.47
AMERICAN (SINGLE CUT-DOWN)	92MM 3.622"	36"	35mm .787" THROW	16mm 0.63"	69.0	82.5	673540021	16-40021LA	663540017UA	3468	24.87	14.47
					82.0	95.5	673540022	16-40021LA	663540018UA	3468	24.87	27.47
					95.0	108.5	673540023	16-40021LA	663540019UA	3468	24.87	40.47
					108.0	121.5	673540024	16-40021LA	663540020UA	3468	24.87	53.47
				20mm 0.787"	69.0	82.5	673542021	20-42021LA	663542017UA	3467	24.87	14.47
					82.0	95.5	673542022	20-42021LA	663542018UA	3467	24.87	27.47
					95.0	108.5	673542023	20-42021LA	663542019UA	3467	24.87	40.47
					108.0	121.5	673542024	20-42021LA	663542020UA	3467	24.87	53.47

DIMENSIONS ARE FOR REFERENCE ONLY AND ARE IN INCHES UNLESS OTHERWISE NOTED.
CONTACT OUR ENGINEERING DEPARTMENT WITH SPECIFIC APPLICATION QUESTIONS OR REQUIREMENTS.
NOT ALL COMBINATIONS LISTED ARE CURRENTLY STOCKED, EXTRA LEAD TIME MAY BE REQUIRED.

PREMIERE 3000

GEARBOX STRIKES

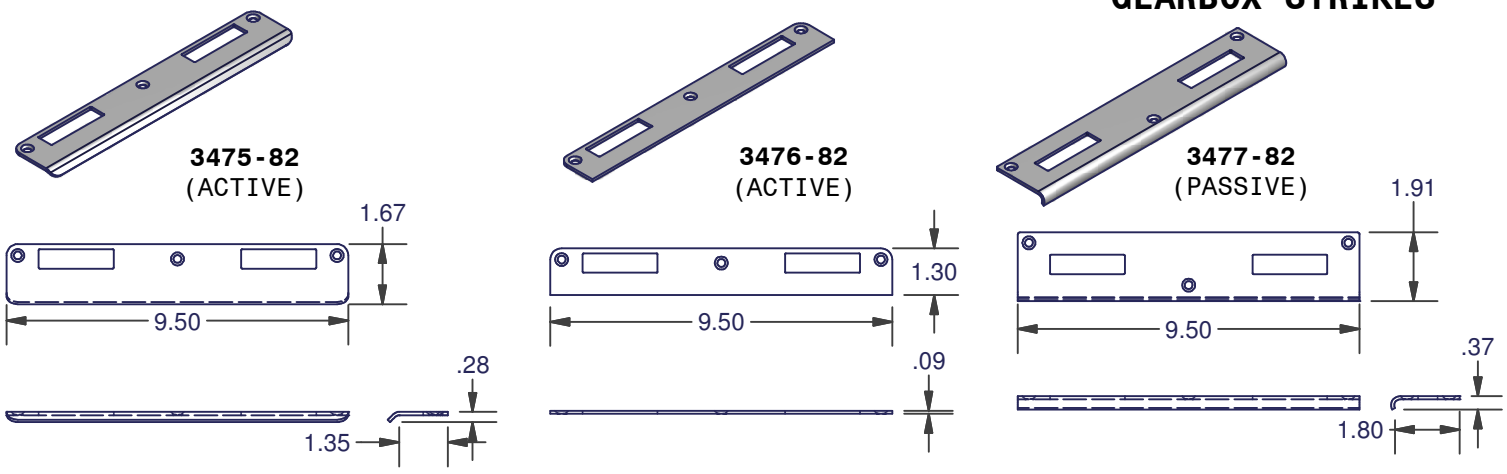

GEARBOX STRIKES			
ITEM #	DESCRIPTION	SUBSTRATE	BOX QTY
3475-82	CENTER STRIKE WITH RADIUS EDGE - BRUSHED STAINLESS STEEL	304 SS	100
3476-82	CENTER STRIKE - BRUSHED STAINLESS STEEL	304 SS	100
3477-82	PASSIVE CENTER STRIKE - BRUSHED STAINLESS STEEL	304 SS	100

SHOOT BOLT STRIKES

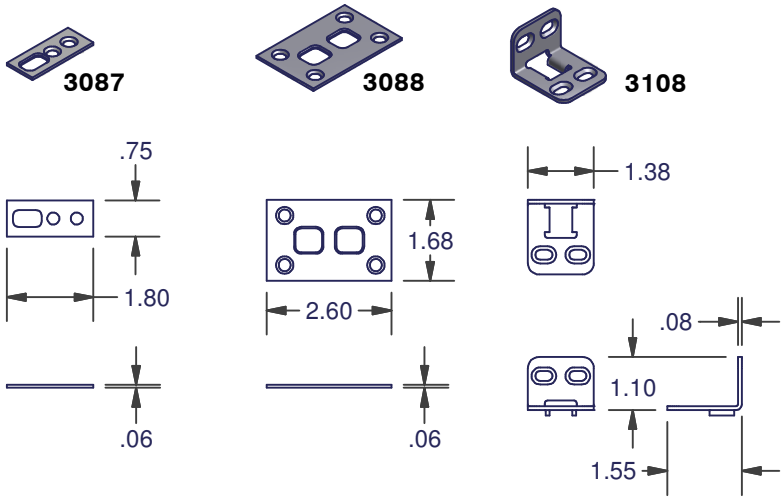

SHOOT BOLT STRIKES			
ITEM #	DESCRIPTION	SUBSTRATE	BOX QTY
3087	SINGLE SHOOT BOLT STRIKE - STAINLESS STEEL	304 SS	50
3088	DOUBLE SHOOT BOLT STRIKE - STAINLESS STEEL	304 SS	50
3108-82	CORNER SHOOT BOLT STRIKE - BRUSHED STAINLESS STEEL	304 SS	100

TONGUE OR RHINO HOOK STRIKES

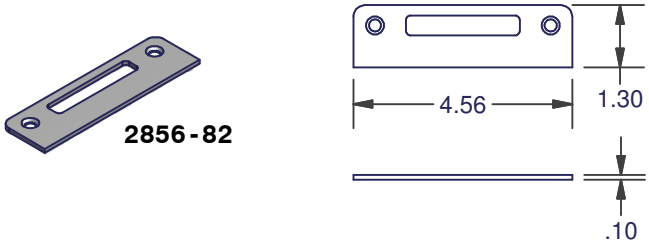

TONGUE OR RHINO HOOK STRIKES			
ITEM #	DESCRIPTION	SUBSTRATE	BOX QTY
2856-82	STRIKE - BRUSHED STAINLESS STEEL	304 SS	50

DIMENSIONS ARE FOR REFERENCE ONLY AND ARE IN INCHES UNLESS OTHERWISE NOTED.
CONTACT OUR ENGINEERING DEPARTMENT WITH SPECIFIC APPLICATION QUESTIONS OR REQUIREMENTS.
NOT ALL COMBINATIONS LISTED ARE CURRENTLY STOCKED, EXTRA LEAD TIME MAY BE REQUIRED.

PREMIERE 3000

- CAN BE USED WITH RHINO HOOKS OR SHOOT BOLTS.

ADJUSTABLE STRIKES

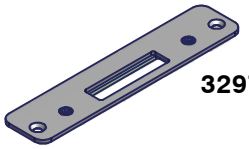

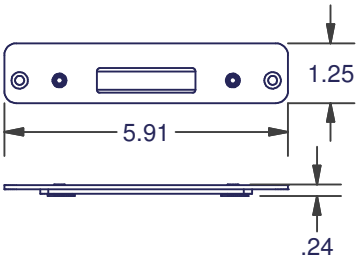

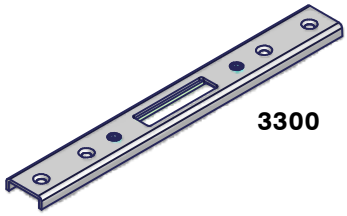

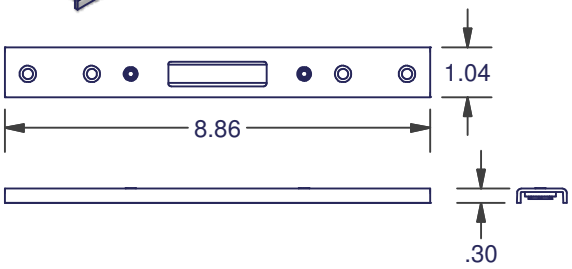

ADJUSTABLE STRIKES			
ITEM #	DESCRIPTION	SUBSTRATE	BOX QTY
3297	ADJUSTABLE STRIKE FLAT	304 SS	100
3300	ADJUSTABLE STRIKE FORMED	304 SS	100

OTHER ACCESSORIES

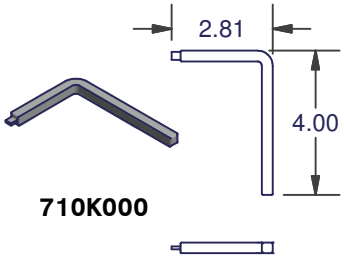

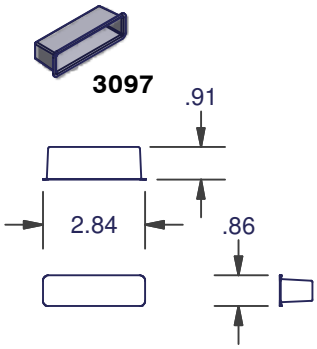

OTHER ACCESSORIES		
ITEM #	DESCRIPTION	BOX QTY
710K000	CONSTRUCTION HANDLE	50
3097	DUST CAP	50

MOUNTING SCREWS

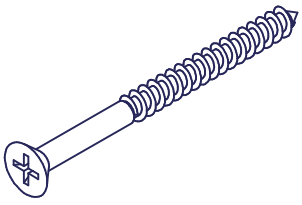

#8 X 2" WOOD SCREW
3203-84

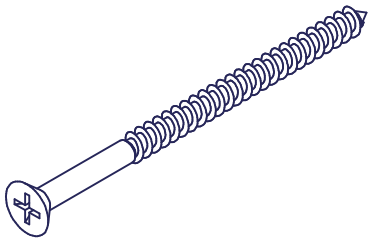

#8 X 2 1/2" WOOD SCREW
3225

DIMENSIONS ARE FOR REFERENCE ONLY AND ARE IN INCHES UNLESS OTHERWISE NOTED.
CONTACT OUR ENGINEERING DEPARTMENT WITH SPECIFIC APPLICATION QUESTIONS OR REQUIREMENTS.
NOT ALL COMBINATIONS LISTED ARE CURRENTLY STOCKED, EXTRA LEAD TIME MAY BE REQUIRED.

PREMIERE 3000

RHINO HOOK WITHOUT SHOOT TIP

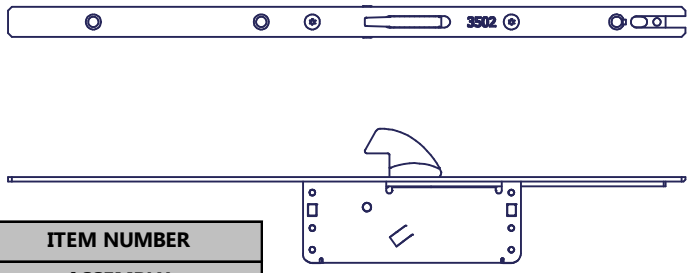

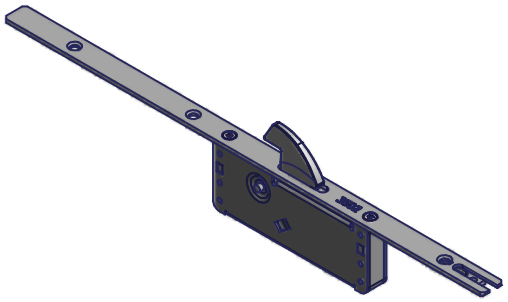

FB	ITEM NUMBER ASSEMBLY
16mm 0.63"	3502-16H
20mm 0.787"	3503-20H

RHINO HOOK WITH SHOOT TIP

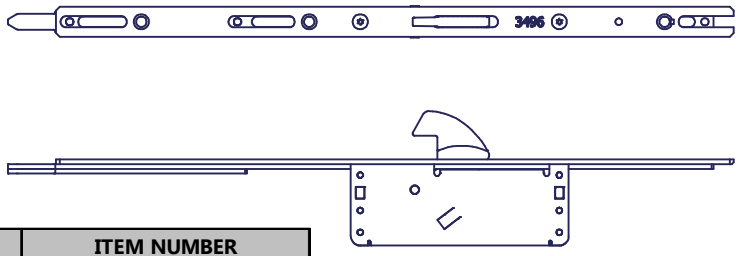

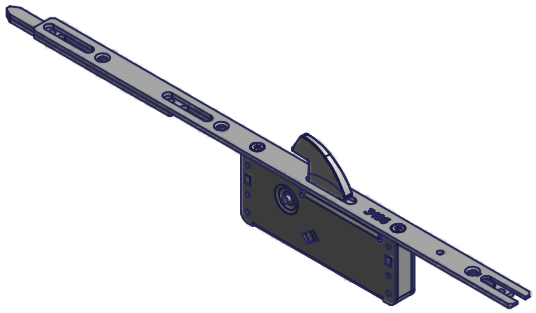

FB	ITEM NUMBER ASSEMBLY
16mm 0.63"	3496-16H
20mm 0.787"	3497-20H

RHINO EXTENSION PASSIVE

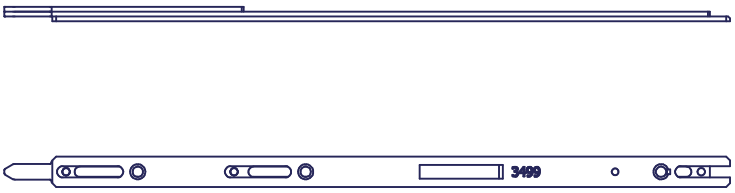

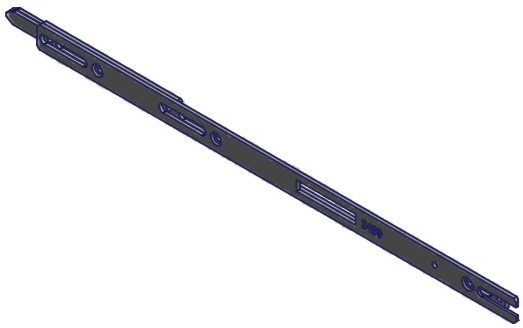

FB	ITEM NUMBER ASSEMBLY
16mm 0.63"	3499-16
20mm 0.787"	3500-20

DIMENSIONS ARE FOR REFERENCE ONLY AND ARE IN INCHES UNLESS OTHERWISE NOTED.
CONTACT OUR ENGINEERING DEPARTMENT WITH SPECIFIC APPLICATION QUESTIONS OR REQUIREMENTS.
NOT ALL COMBINATIONS LISTED ARE CURRENTLY STOCKED, EXTRA LEAD TIME MAY BE REQUIRED.

PREMIERE 3000

PREMIERE 3000 FABRICATION DRAWING

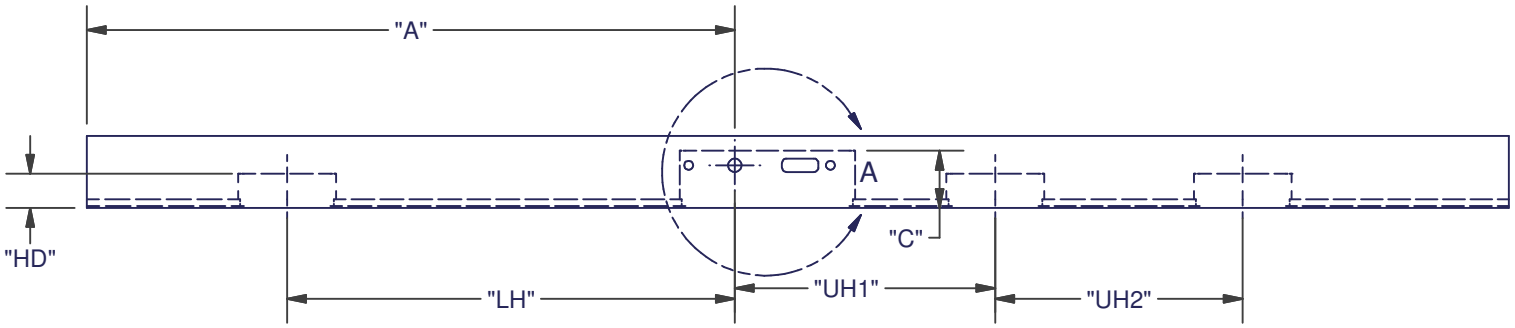

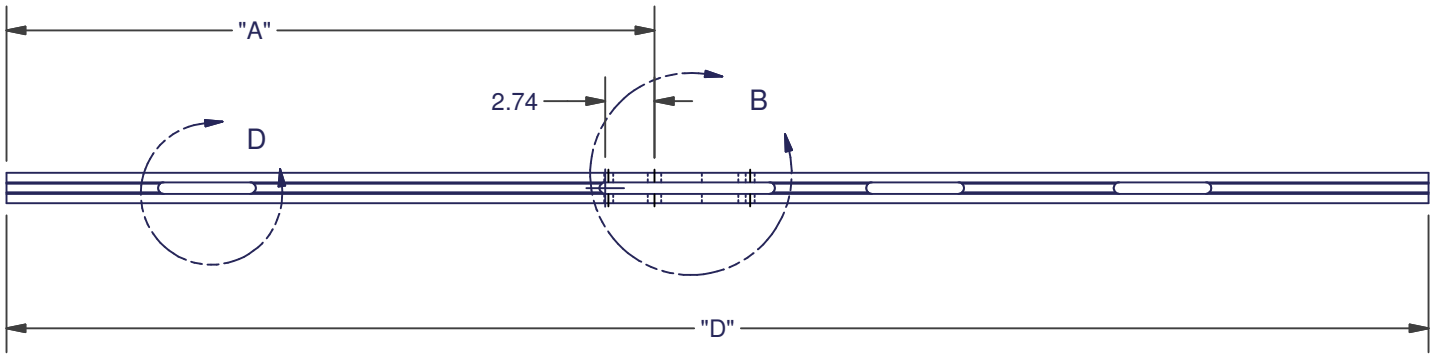

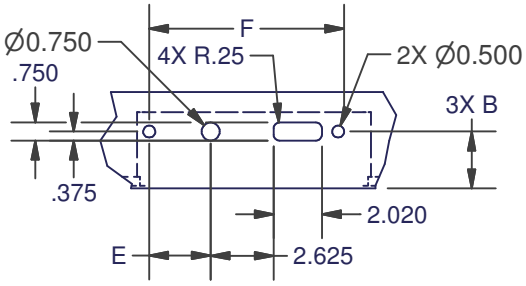

DETAIL A
SCALE 1:8

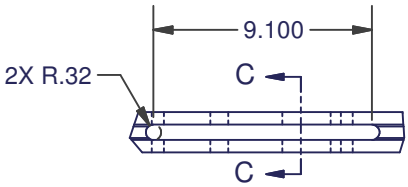

DETAIL B
SCALE 1:8

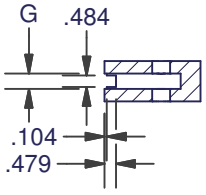

SECTION C-C
SCALE 1:8

DIMENSIONS					
A	HANDLE HEIGHT	CUSTOMER SPECIFIC			
B	BACKSET	2.362 (60mm)	1.968 (50mm)	1.772 (45mm)	1.378 (35mm)
C	GEARBOX DEPTH	3.172	2.778	2.582	2.188
D	OVERALL LENGTH	CUSTOMER SPECIFIC			
E	A-PLATE	3.366			
	B&C PLATE	2.559			
F	A-PLATE	8.465			
	B&C PLATE	7.874			
G	16mm FACEBAR	0.640			
	20mm FACEBAR	0.797			

OPTIONAL RHINO HOOK DIMENSIONS		
LH		CUSTOMER SPECIFIC
UH1		CUSTOMER SPECIFIC
UH2		CUSTOMER SPECIFIC
HD	1.893	

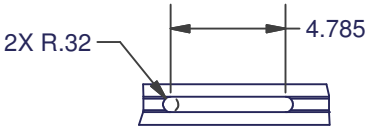

DETAIL D
SCALE 1:8
(OPTIONAL FOR RHINO HOOK)

DIMENSIONS ARE FOR REFERENCE ONLY AND ARE IN INCHES UNLESS OTHERWISE NOTED.
CONTACT OUR ENGINEERING DEPARTMENT WITH SPECIFIC APPLICATION QUESTIONS OR REQUIREMENTS.
NOT ALL COMBINATIONS LISTED ARE CURRENTLY STOCKED, EXTRA LEAD TIME MAY BE REQUIRED.